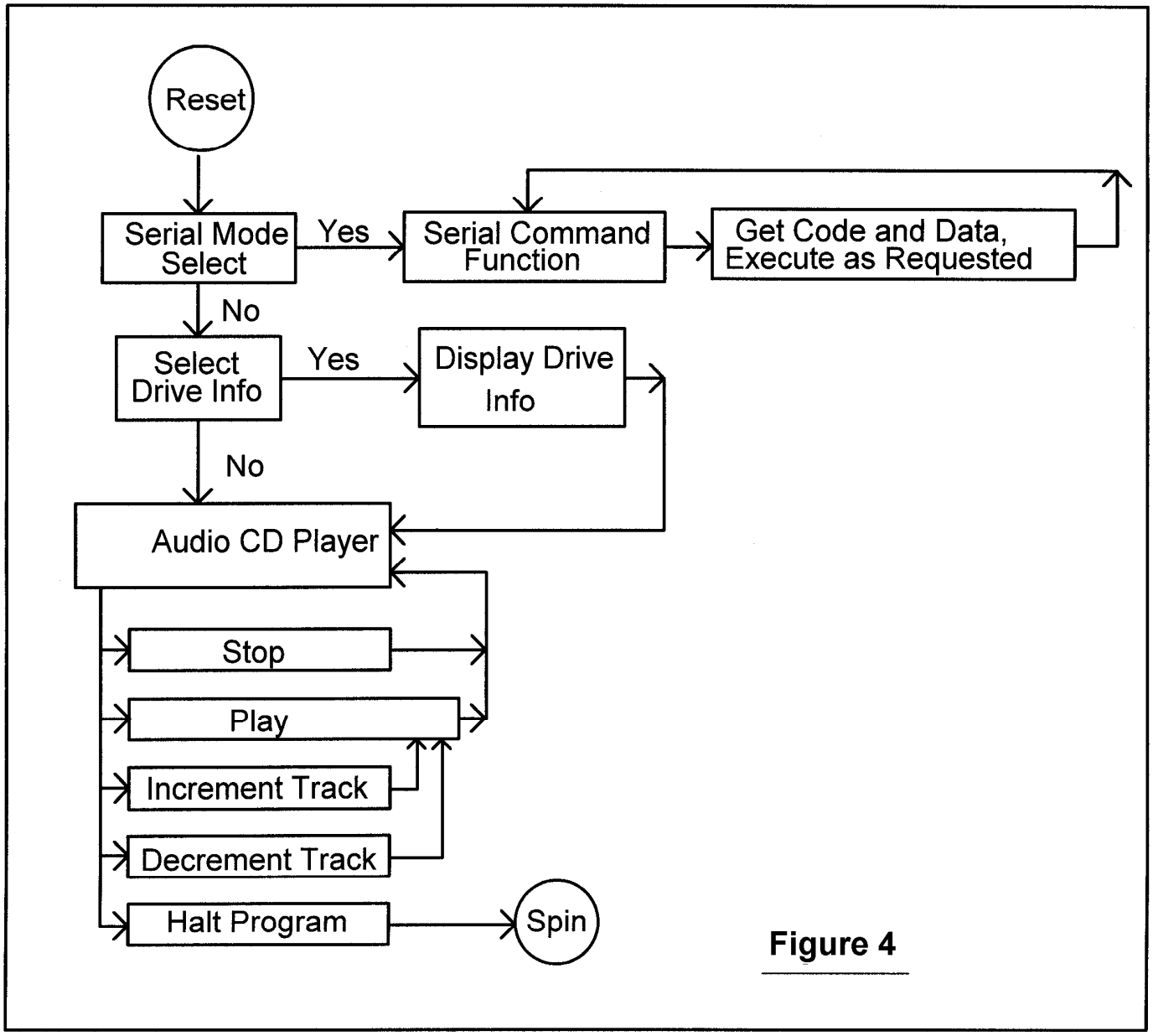
Reset
Serial Mode Select
Yes
Serial Command Function
Get Code and Data, Execute as Requested
No
Select Drive Info
Yes
Display Drive Info
No
Audio CD Player
Stop
Play
Increment Track
Decrement Track
Halt Program
Spin

**Figure 4**